Mechanik M4 90
Machine head M4 90

PK: 1054
1054XXXX.22.70

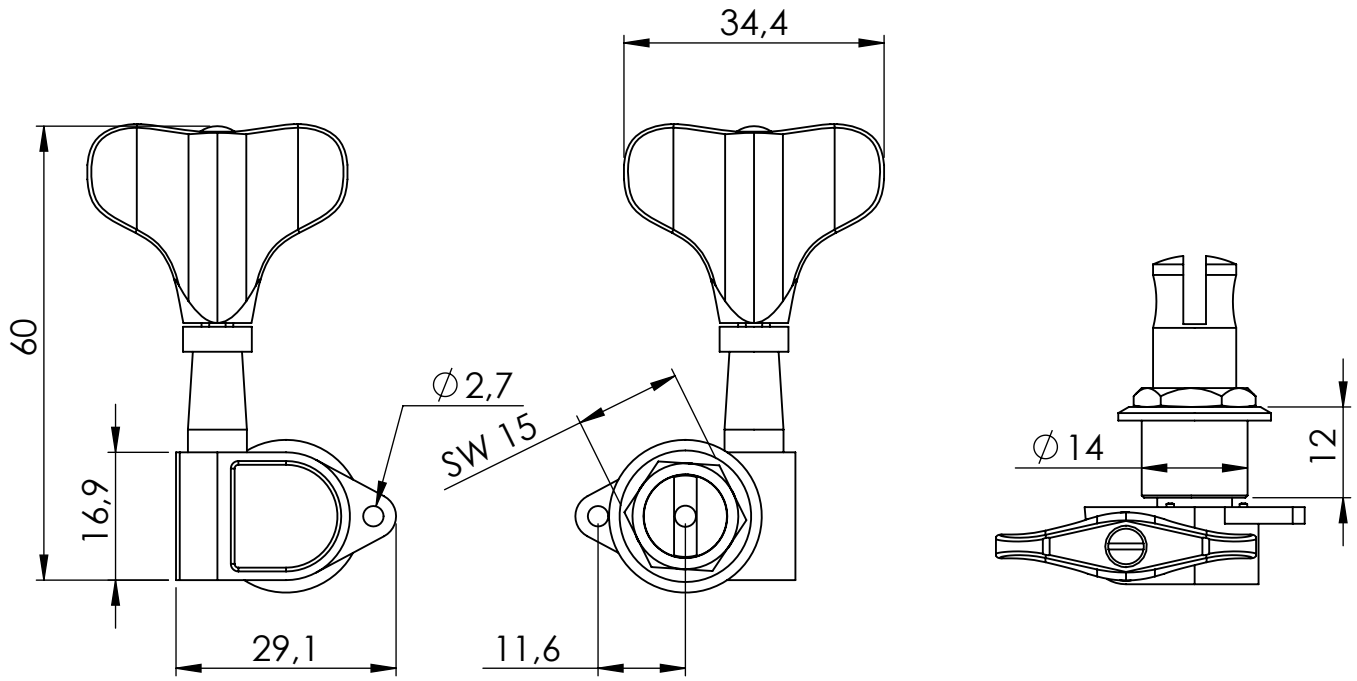

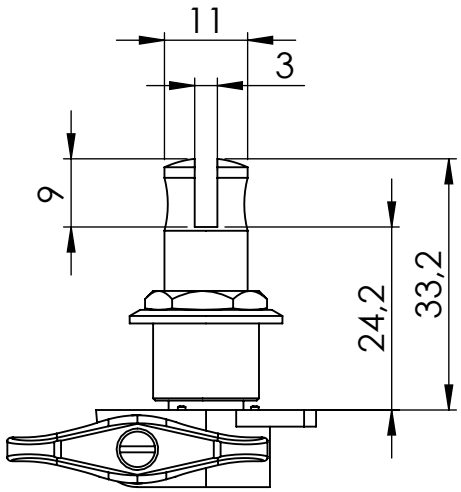

alle Maße in [mm]
all measures in [mm]

Technische Änderungen vorbehalten
Subject to technical changes