STM -
pair of studs and
inserts (M5)
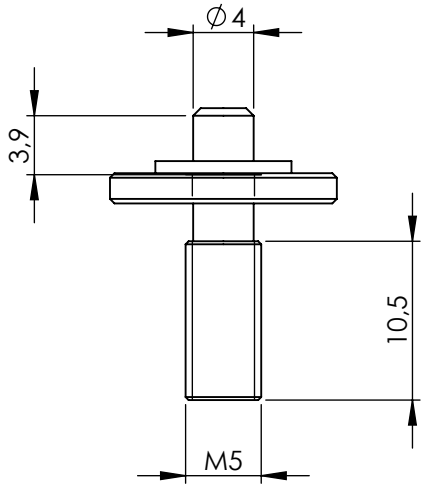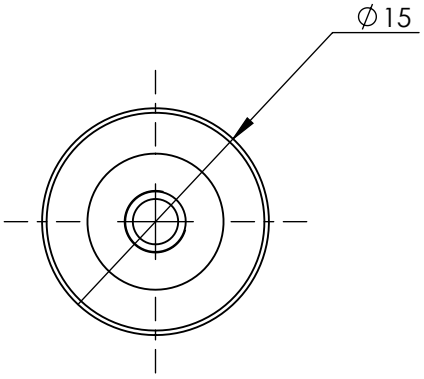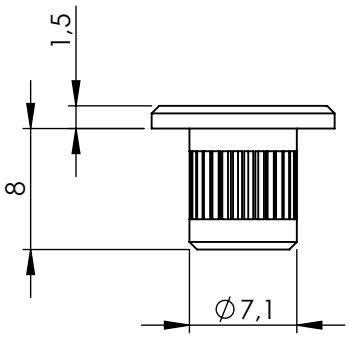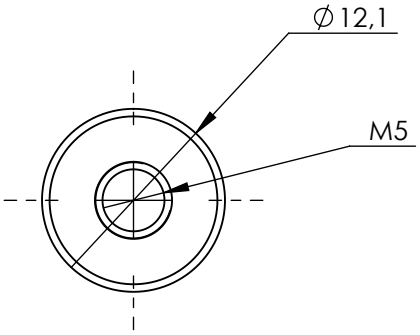
PK: 2223
2223XX00